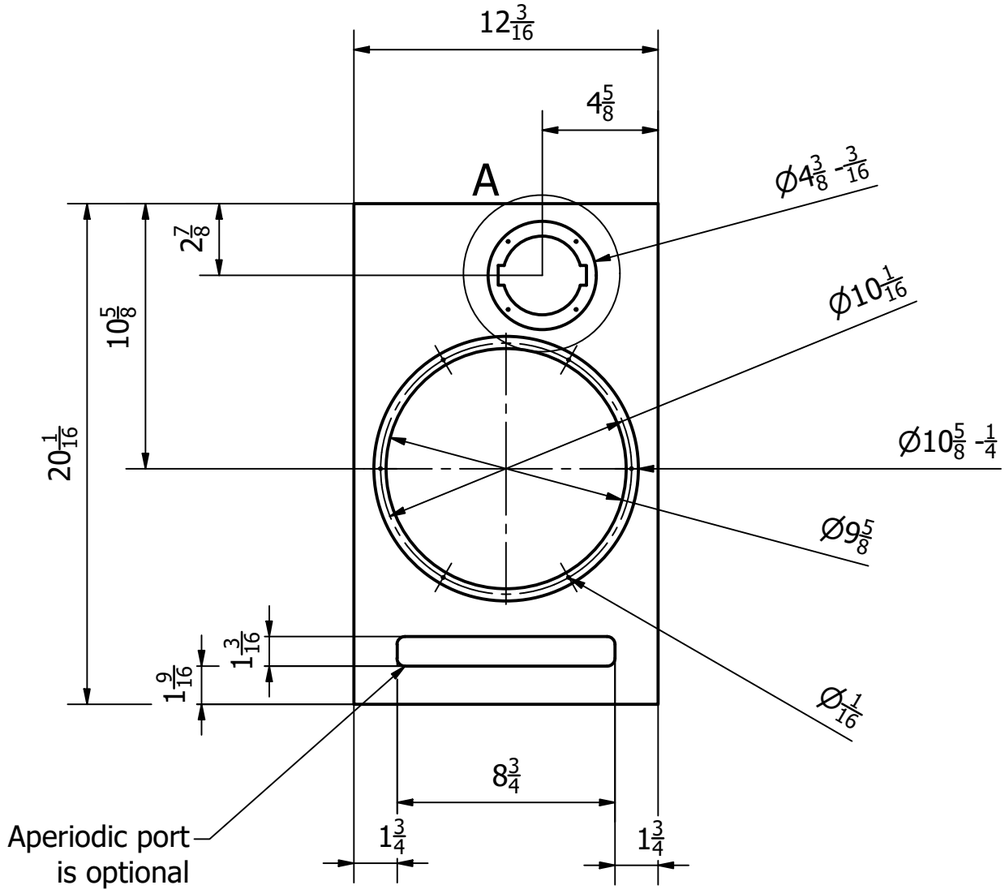

B-B (0.16 : 1)

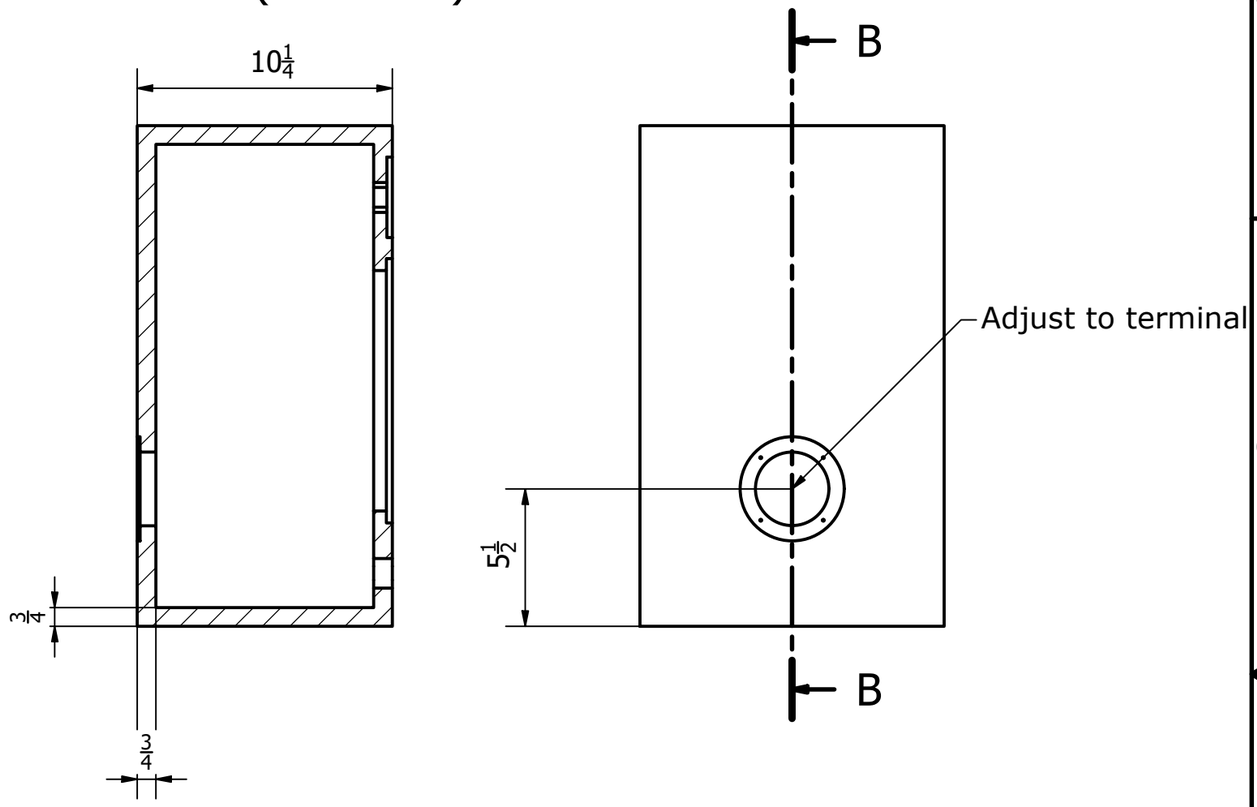

A (0.32 : 1)

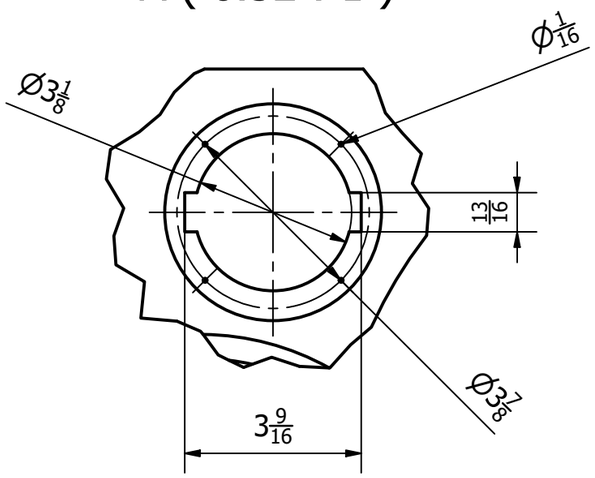

Material: 3/4" MDF
Finish: To your liking
Damping material: Lightly stuffed and evenly distributed - approx. 50g of damping material
Optional aperiodic port: 12g of damping material
The damping material should be held in place with a metal grid

REV	DESCRIPTION	DATE	APPROVED
A	Adjusted tweeter cut-out	11.05.2020	HS

REVISION HISTORY

Designed by	Checked by	Approved by	Date		Date	
haavard					28.06.2012	

seas
The Art of Sound Perfection

A26_cab_inch

Edition: A

Scale